CG25-35+

PRODRY2+ DRYING TUMBLER

ARCHITECTURAL/MECHANICAL
PRODUCT SPECIFICATIONS

ProDry2+

Inverter Drive

Capacity *lbs*	up to 35
Cylinder Diameter *inch*	26.5
Cylinder Depth *inch*	30
Cylinder Volume *cu ft*	9.6
Net Weight *lbs*	340
Crated Weight *lbs*	375
Machine Width *inch*	28
Machine Depth *inch*	45.5
Machine Height *inch*	64
Door Opening *inch*	22.7
Floor to Door *inch*	27.5
Shipping Dimensions *inch* WxDxH	30 x 49 x 68
Exhaust Diameter *inch*	6
Exhaust Air Flow *cfm*	500
Exhaust Back Pressure (max) *WCI*	0.80
Required Makeup Air *sq in*	110
Electric Heating *kW*	21
Gas Connection *inch*	1/2 NPT
Gas Heating *BTU/h*	73,000
Gas Pressure (max/recommended/min)	
Natural Gas *wc*	10.5 / 6.5 / 5
Propane *wc*	13 / 11 / 10

GAS MODELS

AVAILABLE VOLTAGES	WIRE CONDUCTOR	FULL LOAD AMPS	RECOMMENDED BREAKER SIZE
100-120/50-60/1	1W+N+G	10	15
200-240/50-60/1	2W+G	6	15
380-415/50-60/3	3W+G	3	15
440-480/50-60/3	3W+G	3	15

ELECTRIC MODELS

AVAILABLE VOLTAGES	WIRE CONDUCTOR	FULL LOAD AMPS	RECOMMENDED BREAKER SIZE
230-240/50-60/3	3W+G	52	70
380/50-60/3	3W+G	33	45
400-415/50-60/3	3W+G	30	40
460-480/50-60/3	3W+G	27	35

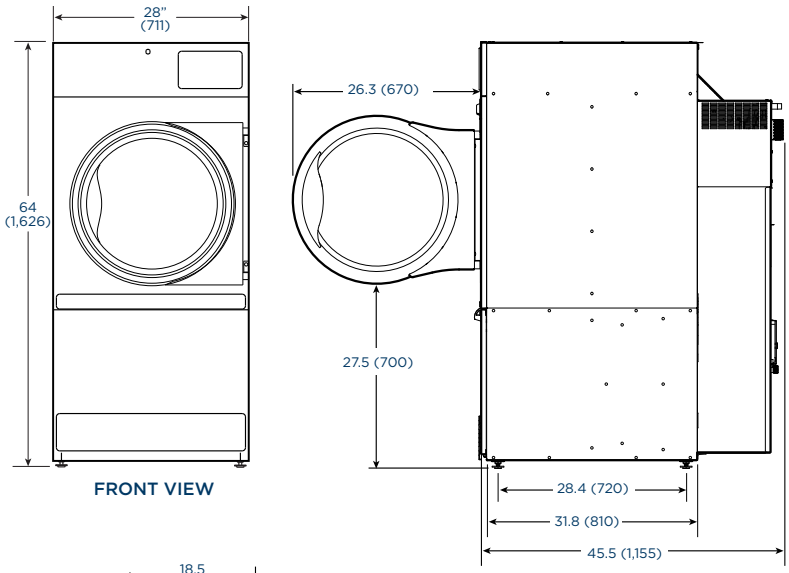

FRONT VIEW

SIDE VIEW

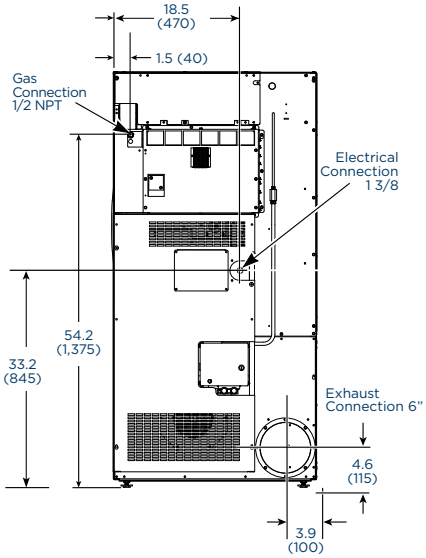

BACK VIEW

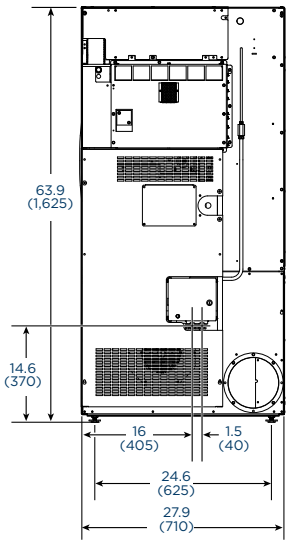

BACK VIEW

* Specifications subject to change without notice or obligation. Contact Continental Girbau at (800) 256-1073 for dimensions not shown or for clarification.

continentalgirbau.com • (800) 256-1073
2500 State Road 44 • Oshkosh, WI 54904